SML White Paper

Security Use Cases

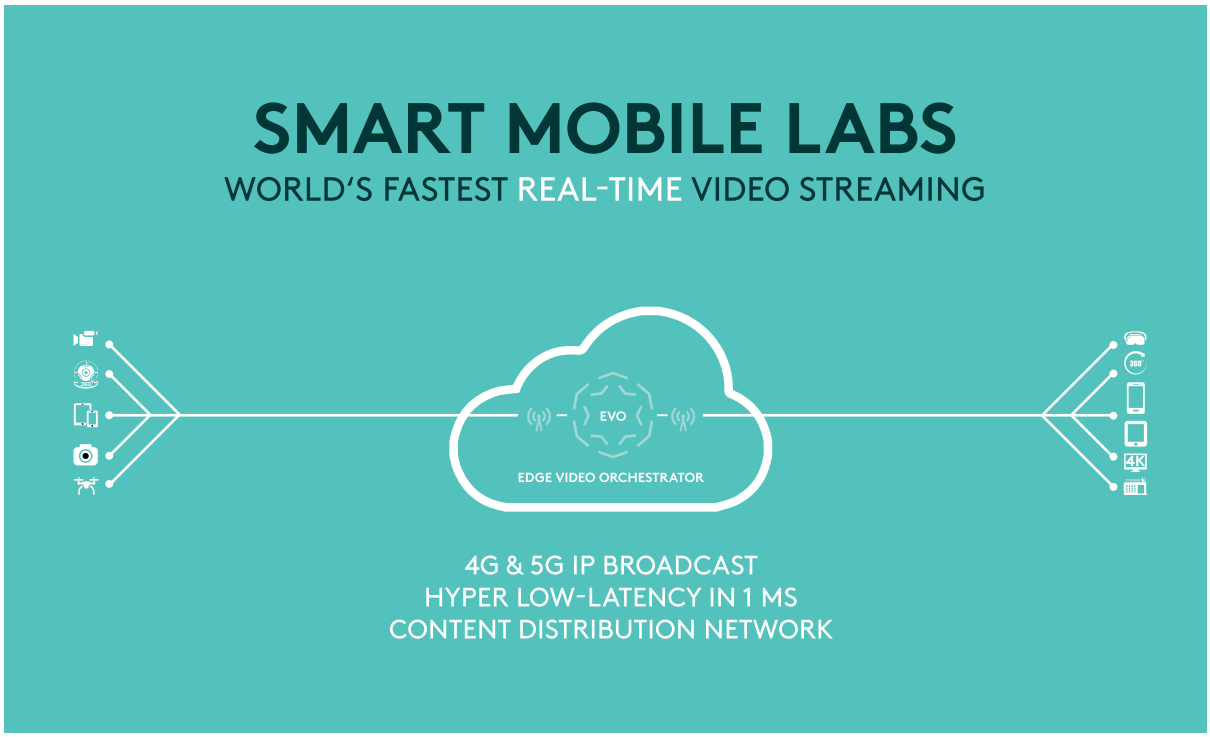

March 2020

Table of Contents

Table of Figures

Table of Tables

List of Abbreviations

SML	Smart Mobile Labs AG
MEC	Mobile Edge Computing
C4ISR	Command, Control, Communications, Computer, Intelligence, Surveillance, and Reconnaissance
3GPP	3rd Generation Partnership Project
MC	Mission Critical
EVO	Edge Video Orchestrator

Offer Summary

Smart Mobile Labs AG is the world's fastest video streaming provider without compromising video quality. Thanks to our streaming technology we enable many(cameras)-to-many(user devices) streaming, with end-to-end 4K latency well below 100 msec across mobile 4G/5G infrastructure as recently proved at Deutsche Telekom's 5G test center. Our core EVO server allows distribution of streams with a hyper low latency of just 1 msec switching time. We are technologically agnostic to legacy systems and our solutions are extremely flexible and highly scalable.

This core competency offers an unique competitive advantage in many data-intensive Public Safety & Defence and/or Blue Light use cases like Mobile Tactical Communication, Critical Site Protection or Border Security.

Background

Smart Mobile Labs AG ('SML') was incorporated in Germany in 2013 as a result of the sale of Nokia's end-consumer hardware business to Microsoft. Nokia's remaining network-assets from the sale were bundled into a Nokia test lab in Munich from which SML emerged.

Value Proposition

We address the challenge of hyper-low-latency, large-scale data transmission with an unique Mobile Edge Computing (MEC) technology. As global technology infrastructure migrates to 4G/5G networks, a wide range of 'real-time' data transfer applications offer fundamentally new service and usage opportunities. Examples are 'live' and 'real-time on-demand' video streaming without latency in highest quality (the current market standard for latency is ~ 2-3 seconds).

SML has a globally unique technology solution for data transmission in both 4G and 5G networks. SML can thus be a partner of choice to offer unique value-added services based on bandwidth optimization and ultra-low-latency. One possible partnership example where a partnership could form is in future public or private tenders in the fields of Public Safety & Security.

Our technology has been successfully tested and implemented across multiple markets:

1) Transmission of video live-feeds from public safety personnel in 4G/5G networks - for example successfully tested with Motorola Solutions' critical communications group.
2) Video live-streaming of events (sports, music, etc.) onto mobile phones as the 'second screen' - for example at the Le Mans 24-hour car race.
3) Traffic shaping in 5G networks to enable Mobile Network Operators to offer a comprehensive Cloud Gaming service. We are currently prototyping this in cooperation with Deutsche Telekom.

Our technology is based on MEC which offers a unique way to create ultra-low latency data compression and transmission solutions.

The core of our technology is the way we implement data packet forwarding into our EVO server. This enables our software to get close to the theoretical minimum possible time, through smart switching delay below 1 msec.

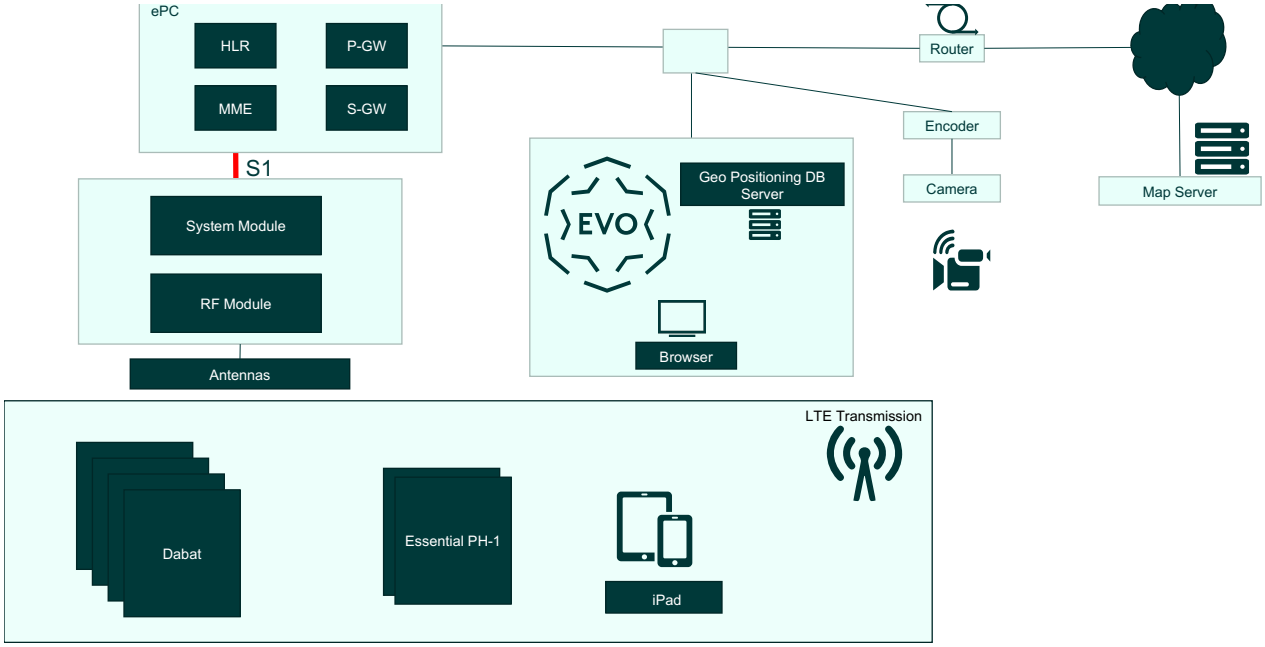

Figure 1: System Architecture

In the Public Safety field, police officers and first responders can communicate via video-feeds and share geo-spatial and temporal data from virtually unlimited sources in real-time with Control & Command Centers (C4ISR) thereby enabling better decision making in critical situations.

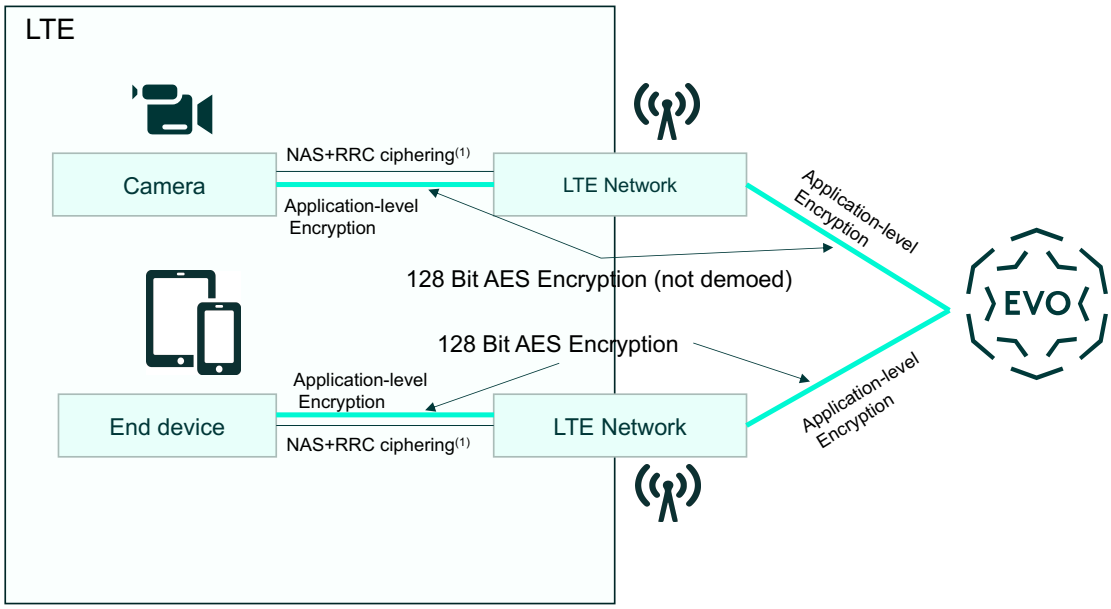

(1) Short Overview: http://www.eventhelix.com/lte/security/LTE-Security-Presentation.pdf

Figure 2: Encryption and Protocols

Given that our technology is enabling 'new' and emerging applications on 4G and soon 5G networks across different market segments, SML has ensured that its technology offering is technologically agnostic; compatible with all operating systems or deployed legacy sensors and devices.

Security Use Cases

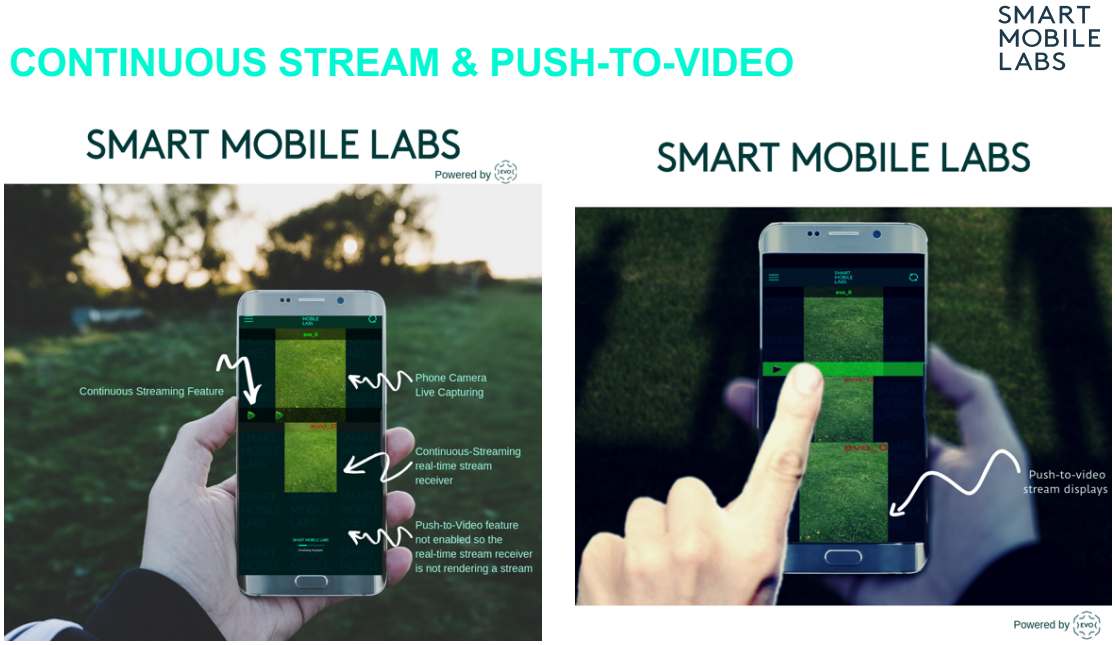

Figure 3: Simple display of Push to Video (right) and Continuous Streaming (Left) on regular smartphones

Figure 4: Sender App phone mounted on drones

Mobile Tactical Communication / First Response

SML's solution for video streaming and dispatching significantly exceeds the 3GPP standards for Mission Critical (MC) Services as it allows for both lower latency and increased video quality while offering superior connectivity amongst all users and management levels (local, regional, national) with a predefined hierarchy.

More than 2.000 video streams can be managed in parallel by a single SML EVO server instance. Servers can be managed ina hierarchy to allow almost infinite scalability in terms of number of video streams managed. The streams can be enhanced through data overlays, e.g. georeferencing and/or situational maps. Additionally, they can also be recorded (incl. log data) both locally or centrally.

More fundamentally in the context of Mobile Tactical Communication however, its flexibility (up- and down streams) can be configured ad hoc. In a scenario where a rcritical situation is ongoing, a nearby police officer can activate the push-to-video button and deliver the most accurate view of the scenery to the Command and Control Center.

The Command and Control Center, either fixed or mobile, can then dispatch this stream to whom it sees best fit. Information can thus travel seamlessly from police to fire brigade or emergency medical support on the ground giving the necessary stakeholders a bird's eye view on the situation at hand.

SML has developed, designed and delivered a complete stand-alone application running on standard commercial smartphone devices for this purpose.

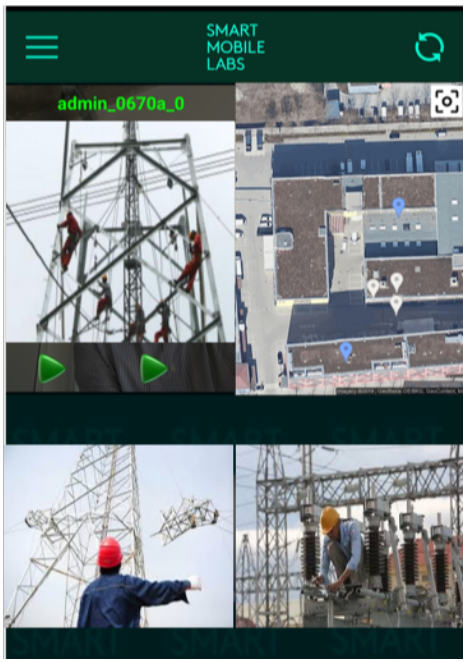

Figure 5: Tactical Communication App with activated map view showing position of colleagues

Critical Infrastructure Protection

- The SML EVO server can **combine** e.g. **more than 100 fixed CCTV cameras with mobile sensors** such as body cams and drones.
- The **video streams can be combined with analytics and algorithms**, e.g. for face recognition, graphical overlays or georeferencing sensors to enrich the real time video view.

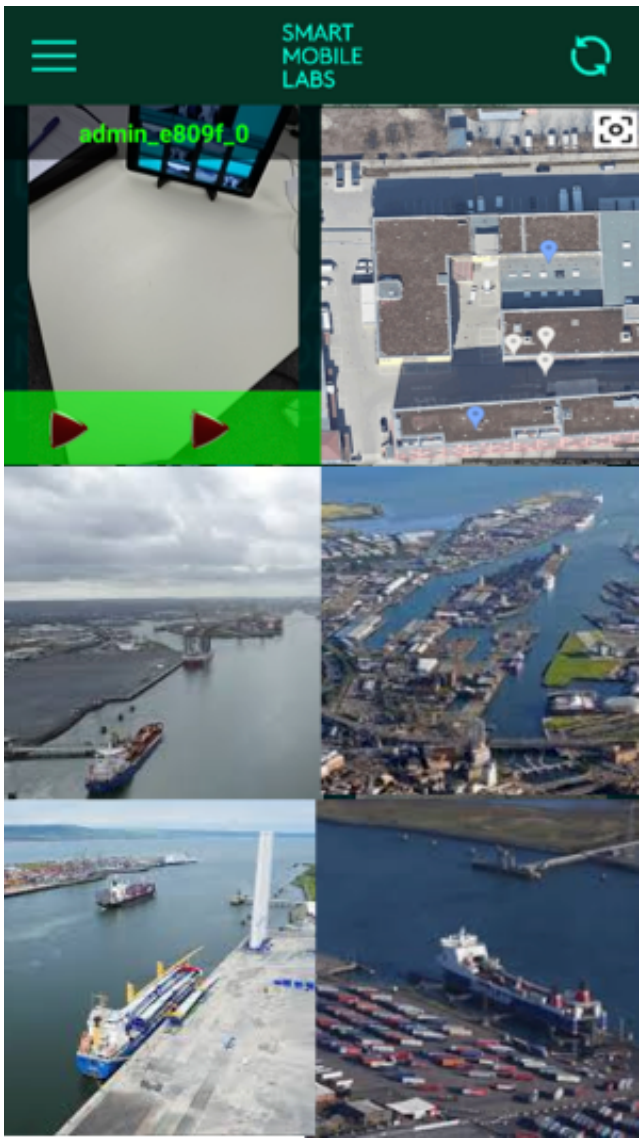

Figure 6: Critical Site Protection App with push to video activated

Border Protection

SML's technology could complement Border Protection solutions. Data from long-range cameras, radars, sonars and movement sensors can be integrated in the video stream for better local decision making and surveillance. This includes direct access to the camera control. As for the other use cases, various layers of users and their group management (local, regional, national) as well as analytics and graphical overlay algorithms can be implemented.

Revenue Model

Our business model is to integrate our core technology and capabilities in other products and solution offerings wherever hyper-low latency transmission of high data volume is critical.

Governments around the world are building dedicated 4G/5G networks to enable reliable transmission of voice, video and other data in times of crises, e.g. National Home Office, “Mobile Police”. While these network projects are complex, live-video transmission is a critical component in most, if not all of them, and actively demanded. SML can thus effectively complement the secure communications technology.

We operate on a B2B level with a licence fee revenue generating model across all market segments. The licence fees depend on multiple factors including:

1. the number of users of our software
2. the duration of the licence for each application.

As part of our business range, we also offer 4G/5G campus network set-ups.

Competition

We have scouted the market for direct and indirect competitors to benchmark ourselves against the market offerings. Our study has found that our product is technologically superior to our direct competitors. In our view, we have the 'best' product in the market considering, in particular, latency, ability to be integrated into 4G/5G networks, and multicast (eMBMS) functionality.

On the contribution/production side, we are not aware of any competitor offering wide-range private 4G/5G mobile networks and camera-connection services, up to 20 km from the base station.

Feature	SML
Contribution	✓
Parallel HD Streams	Many-to-many unlimited
Direct Distribution	✓
Video Stream Orchestration	✓
Latency	<300 msec 4G <200 msec 5G Testbed using lower spec device <100 msec 5G testbed using Samsung S10.
Edge Cloud Network Integration	✓
App	✓
SDK	✓
4G	✓
5G	✓

Table 1: Key Features